REKORDMIX

L1 40-950
L2 50-1450
L3 75-1450

Application

Long-axis agitator for open and closed pits
Dry matter content up to 8 %
Substrate temperature up to 60°C
pH-value 6.5 - 8.2

Tube

Tube diameter Ø 70 x 3 mm in ss304
Slip-on shaft Ø 20 mm with intermediate bearings and two-sided plug connection
Tube filled with approx. 40 % sealing oil ISO VG 68

Technical data

Tube length 2.25 / 2.75 / 3.25 / 3.75 / 4.25 m
Motor handle with handhold
Leg support
Sound pressure level 72 dB(A)
Agitator completely in modular design

Propeller

2-blades

Rekordmix L1	4.0 kW	propeller L4 320	945 rpm
Rekordmix L2	5.0 kW	propeller L2 270	1,450 rpm
Rekordmix L3	7.5 kW	propeller L3 300	1,450 rpm

Galvanized or ss304

Motor

4.0 kW (945 rpm) / 5.0 kW (1.450 rpm - IE3) /
7.5 kW (1,450 rpm)
400 V, 50 Hz
PTC thermistors 160°C as overheat protection

Bearing

2 tapered roller bearings to absorb the axial forces
Shaft sealing rings, optional: mechanical seal SiC/SiC

Accessories

Trolley standard: 100 cm width
Trolley narrow: 58 cm width
Suspension mounting frame EB2 for elevated tanks
Frame clamp for dowel fixing
Oil inspection glass for monitoring the tightness

Control box (optional)

Star-delta-switch
(for L1 and L3 on additional ss304 support)

AGRICULTURE

BIOGAS

REKORDMIX

L1 40-950
L2 50-1450
L3 75-1450

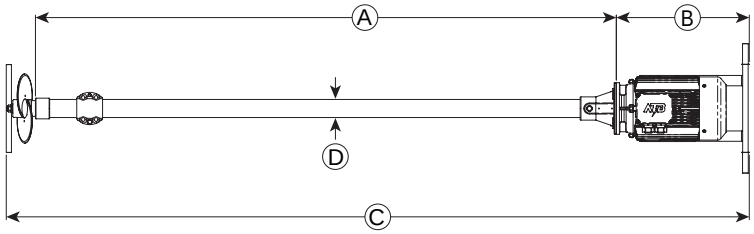

Dimensions

Type	A [mm]	B [mm]	C [mm]	D [mm]	E [mm]					
L1	2,250 - 4,250	510	2,920 - 4,920	70	500					
L2	2,250 - 4,250	460	2,870 - 4,870	70	500					
L3	2,250 - 4,250	510	2,920 - 4,920	70	500					

Technical data

Type	Rated Power [kW]	Rated Voltage [V]	Full load current [A]	Frequency [Hz]	Power factor cos φ	Propeller speed [rpm]	Propeller diameter [mm]	Axial force [kN]	Flow velocity [m/s] *	Pumping rate [m³/min]	Weight approx. [kg]	
L1	4.0	400	9.8	50	0.72	945	320	0.60	4.0	18	110	
L2	5.0	400	10.5	50	0.77	1.450	275	0.75	5.3	17	110	
L3	7.5	400	16.0	50	0.79	1.450	300	1.15	5.7	23	110	

Subject to technical changes
* measured in water and 1.2 m distance

© SUMA Rührtechnik GmbH | Martinszeller Str. 21 | DE-87477 Sulzberg
Phone: +49 8376 / 92131 - 0 | Fax: - 19 | info@suma.de | www.suma.de/en

As per: 2020-01

AGRICULTURE

BIOGAS

REKORDMIX B1

B1 40-950

Application

Dry matter content up to 10 %
Substrate temperature up to 70°C
pH-values 6.5 - 8.2

Tube

Tube Ø 70 x 3 mm in ss304
Stub shaft Ø 20 mm with intermediate bearings and both sided plug-connection
Tube is completely filled with sealing oil ISO VG68

Technical data

Tube length 3.75 / 4.25 m
Safety ring
Oil equalizing container for monitoring the tightness
Sound pressure level 72 dB(A)
Agitator completely manufactured in modular design

Propeller

2-bladed propeller with safety ring
B1: 4.0 kW | propeller L4 (320 mm) | 950 rpm
Galvanized or ss304

Motor

Power: 4.0 kW
400 V, 50 Hz, 950 rpm
PTC thermistors 160°C for overheat protection
Ex-Motor Ⓔx II 3G Ex nA IIA T3 Gc (ex-zone 2)

Ex-zone

Ex-zone 2 (outside the tank) and zone 1 (inside the tank)
Classification mechanical components
CE Ⓔx II 2G Ex h IIA T3 Gb

Bearing

2 tapered roller bearings to absorb the axial forces
Mechanical seal in SiC/SiC,
- independent of rotation direction
Interim bearings for the drive shaft

Control box (optional)

Soft start - frequency converter
Delivery without connecting cable

AGRICULTURE
BIOGAS
INDUSTRY

REKORDMIX B1

B1 40-950

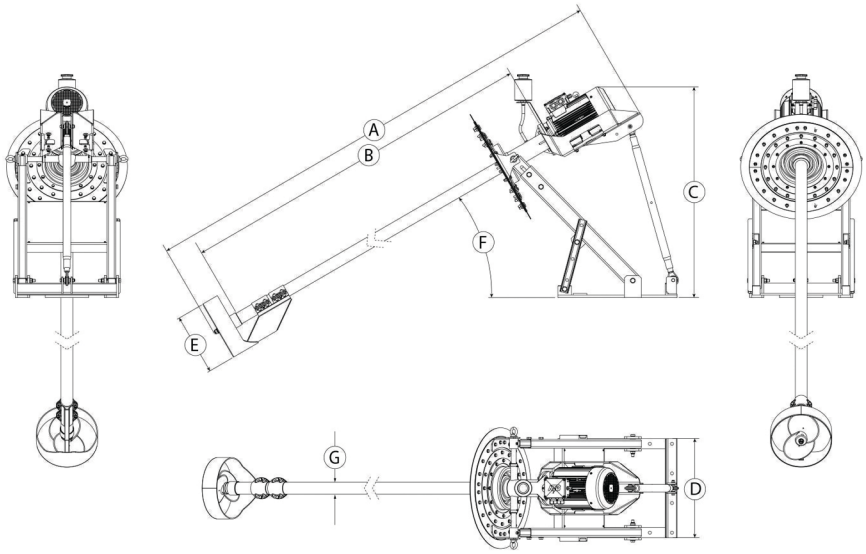

Dimensions

Type	A [mm]	B [mm]	C [mm]	D [mm]	E [mm]	F	G [Ø in mm]		
B1	4,400 / 4,900	3,700 / 4,200	1,235	725	355	30°	70		

Technical data

Type	Rated Power [kW]	Rated Voltage [V]	Rated Current [A]	Frequency [Hz]	Power Factor cos φ	Propeller speed [rpm]	Propeller diameter [mm]	Axial force [kN]	Flow velocity [m/s] *	Pumping rate Water [m³/min]	Weight approximate [kg]	
B1	4.0	400	9.8	50	0.72	950	320	0.6	4.0	18	205	

Subject to technical changes
* measured in water and 1.2 m distance

بسیار ارزین پارس
نمایندگی ایران
تلفن تماس: ۸ و ۸۸۳۲۴۹۳۷ - ۰۲۱
Email: sales@brp.co.ir

© SUMA Rührtechnik GmbH | Martinszeller Str. 21 | DE-87477 Sulzberg

Phone: +49 8376 / 92131 - 0 | Fax: - 19 | info@suma.de | www.suma.de/en

As per: 2020-02

AGRICULTURE
BIOGAS
INDUSTRY